TR41.11-02-02-006
TR41-01-11-073

BUILDING GLOBAL COMMUNICATIONS

# COMMITTEE CORRESPONDENCE

November 9, 2001

Alliance for Telecommunications Industry Solutions (ATIS)
1200 G Street, NW, Suite 500
Washington, DC 20005 USA
Attention: Mr. Tim Jefferies
Director, ACTA and Technology Development

Response to ACTA Requests Related to Customer Instructions

TIA TR41 subcommittee, TR41.11 "Administrative Regulatory Considerations" received a request from the ACTA (our contribution number TR41.11-01-11-059) to "review and revise Exhibit J of the Part 68 Application Guide and submit it to ACTA." Also, TR41.11 received a request from ACTA (our contribution number TR41.11-01-05-027) to develop "appropriate wording that ACTA could adopt as mandatory to be included in the CIBs of alarm dialers" to help solve an issue bought to the ACTA related to RJ31X jacks.

The attached document addresses these two requests. It is the customer information extracted from the most recent draft of what will become TSB-129-A, and contains:

- materials derived from Part 68 Application Guide, Exhibit J
- revisions as necessary to reflect the current TTE approval process (e.g. references to FCC)
- new material relating to the use of RJ31X and RJ38X jacks
- revision of permissible formats for delivery of customer information in alignment with the recent FCC OET NPRM 01-290, Docket 01-278

Please note that the source for this information (draft TSB-129-A) is a work-in-progress. TR41.11 anticipates that this document will be submitted for TIA ballot in February 2002.

Sincerely,

Greg Slingerland
Chair, TIA TR41.11

CC: Mr. Steve Whitesell, Chair TR41
Ms. Stephanie Montgomery, Senior Manager, Standards Development and Promotion, TIA

(This correspondence represents "working papers." Therefore, contents cannot be viewed as reflecting the corporate policies or the views of the Telecommunications Industry Association or of any company. The Association, the companies and individuals involved, take no responsibility in the applications of this document.)

2500 Wilson Boulevard
Suite 300
Arlington, VA 22201-3834
USA

+1.703.907.7700
FAX +1.703.907.7727

www.tiaonline.org

# Customer Information

Contributed by TIA TR-41.11
November 2001

The following customer information must be provided to customers with each piece of approved terminal equipment. Please note that there are differences in the information required for consumer products, coin/credit card phones, systems and digital equipment.

Wherever possible example wordings that meet the requirement have been provided. Text in Italics is product or manufacturer specific information.

If the equipment is being approved by the TCB process, a copy of the required customer information must be provided to the TCB. These materials must be identical to what is provided to the customer.

While the information specified here must be provided to the customer, Responsible Parties have the option of either providing that information in printed form, or in whatever alternative form the user manual is provided. Alternative methods include disk, CD-ROM, or via the Internet. The goal is to make sure the information is readily available to users while minimizing the burden on manufacturers.

It is sometimes the practice to ship product in large quantities (bulk) from the manufacturer to a distributor or reseller without customer instructions. This is acceptable as long as the required information accompanies each product shipped to the end customer.

## 1. General Requirements For All Equipment

a) Include the following paragraph:

> This equipment complies with Part 68 of the FCC rules and the Technical Requirements for Connection to the Telephone Network published by the ACTA. On the (insert location of the label) of this equipment is a label that contains, among other information, a product identifier in the format US:AAAEQ##TXXXX. If requested, this number must be provided to the telephone company.

b) List all applicable certification jacks USOCs for the equipment. For some types of analog and digital systems, list associated Facility Interface Codes and Service Order Codes. These are required when the customer orders service from the local telephone company. Refer to ATIS Technical Report No. 5 for a complete listing of all possible jack configuration and their designations (e.g. RJ11C).

c) State that for single and two-line equipment that connects to the telephone network via a plug and jack, the plug and jack used with this equipment must comply with FCC Part 68 rules. Use words similar to the following:

> A TIA/EIA-IS-968 compliant telephone cord and modular plug is provided with this equipment. This equipment is designed to be connected to the telephone network or premises wiring using a compatible modular jack that is also TIA/EIA-IS-968 compliant. See Installation Instructions for details.

d) Explain the Ringer Equivalence Number (or REN) and its use. Note: RENs are associated with loop-start and ground-start ports. Do not use for E&M or digital ports. Use words similar to the following:

The REN is used to determine the number of devices that may be connected to a telephone line. Excessive RENs on a telephone line may result in the devices not ringing in response to an incoming call. In most, but not all areas, the sum of RENs should not exceed five (5.0). To be certain of the number of devices that may be connected to a line, as determined by the total RENs, contact the local telephone company. The REN for this product is part of the product identifier that has the format US:AAAEQ##TXXXX. The digits represented by ## are the REN without a decimal point (e.g 03 is a REN of 0.3).

e) Provide information on what will happen if this equipment causes harm to the telephone network. Use words similar to the following:

If this equipment (insert identity of equipment) causes harm to the telephone network, the telephone company will notify you in advance that temporary discontinuance of service may be required. But if advance notice isn't practical, the telephone company will notify the customer as soon as possible. Also, you will be advised of your right to file a complaint with the FCC if you believe it is necessary.

f) Provide information on what will happen if the telephone company makes changes that could affect this equipment. Use words similar to the following:

The telephone company may make changes in it's facilities, equipment, operations or procedures that could affect the operation of the equipment. If this happens the telephone company will provide advance notice in order for you to make necessary modifications to maintain uninterrupted service.

g) State what to do if there are problems with this equipment. Do not say to return to dealer as dealers can change. Use words similar to the following:

If trouble is experienced with this equipment (insert identity of equipment), for repair or warranty information, please contact (company name or service center in the U.S.A. and phone number.). If the equipment is causing harm to the telephone network, the telephone company may request that you disconnect the equipment until the problem is resolved.

h) Explain which repairs, if any, the customer (user) can perform. If there is a section in the general customer instructions that provides detailed information on repairs, a reference to that section is acceptable. If this equipment is of a type that is not intended to be repaired, state that fact in place of any repair instructions.

i) State that this equipment can’t be used on party lines. Use words similar to the following:

Connection to party line service is subject to state tariffs. (Contact the state public utility commission, public service commission or corporation commission for information.)

j) If this equipment uses a telephone handset, state that it is hearing aid compatible. Use words similar to the following:

This equipment is hearing aid compatible.

## 2. Customer-Owned Coin/Credit Card Phones

The instructions that are provided with each customer-owned coin or credit card phone must include the following notice:

> To comply with state tariffs, the telephone company must be given notification prior to connection. In some states, the state public utility commission, public service commission or corporation commission must give prior approval of connection.

## 3. Data Equipment

For permissive, programmable and (or) fixed loss loop operation data equipment, in addition to the general requirements for all equipment, information must be provide explaining which jack is associated with each operation.

- Permissive, use RJ11C
- Programmable, use RJ41S and RJ45S
- Fixed Loss Loop, use RJ41S
- Refer to ATIS Technical Report No. 5 for details on these connectors.

For Private (Leased) Line (Analog Data Format) equipment, the type JM8 jack is required. Refer to ATIS Technical Report No. 5 for details on this connector.

For Private (Leased) Line (Digital Format) equipment, in addition to the general requirements for all equipment, certain digital connections require that an encoded analog content and billing protection affidavit be provided the telephone company. Customer instructions must contain information on the preparation and submission of the affidavit.

## 4. Private (Leased) Lines For Analog Services

The Facility Interface Code (FIC) associated with each private line application represents the type of service that will be provided by the telephone company. The user instructions must contain a detailed list of private line ports and the associated FIC's for which the equipment has been approved. In addition, the Service Order Code (SOC) must also be included for analog systems. The SOC indicates the degree of network protection provided by the equipment.

Note: For private line equipment that has been certified for use with metallic pair, services may not be available in all locations.

## 5. Systems

The consumer instructions for systems must contain information on all connectors to the network (switched and private line). This information includes the jack USOCs, FICs, SOCs, the REN if applicable, the premises wiring information, and any affidavits or written authority authorizations. Furthermore, the US:AAAEQ##TXXX number of the system must be provided so that the telephone company can ascertain intended modes of operation and verification of certification ports.

## 6. Adjuncts - KX and PX Devices

The consumer information should contain notification that when the adjunct is used with a leased system, permission of the owner of the equipment should be requested for connection of the adjunct. Customer instructions for KX type telephones with message waiting lights and/or line status indicators must contain statements that they can only be connected to host equipment and never directly to the network. (The reason is that they do not meet the 5 megaohm requirement and most likely will create excessive leakage current when polled by the telephone company's daily automatic loop insulation test equipment. Such events trigger a maintenance action by the telephone company to determine the location of such leakage currents.)

## 7. OEM Devices

When approved equipment such as couplers or modems are furnished to the OEM market (final equipment assemblers), the consumer instructions must contain the following information:

> The mounting of the certified unit in the final assembly must be made so that the certified unit is isolated from exposure to any hazardous voltages within the assembly. Adequate separation and restraint of cables and cords must be provided.
>
> The circuitry from the certified unit to the telephone line must be provided in wiring that carries no other circuitry unless specifically allowed by the rules (such as PC and PR leads. PC board traces carrying tip and ring leads shall have sufficient spacing to avoid surge breakdown.

Information shall be provided as to the power supply source requirements, signal levels, etc., as applicable.

Information shall be provided that when the certified device is enclosed in an assembly, and not readily accessible, that the certification label shall be placed on the exterior of the cabinet for each type of certified device contained therein.

Information shall be provided which states that the final assembler shall provide in the consumer instructions all applicable customer information.

A modular plug or jack shall be provided which complies with TIA/EIA-IS-968 Chapter 6 requirements for dimensions, tolerances and metallic plating.

## 8. Automatic Dialers

The consumer instructions for automatic dialers must contain the following cautionary notice:

> WHEN PROGRAMMING EMERGENCY NUMBERS AND(OR) MAKING TEST CALLS TO EMERGENCY NUMBERS:
>
> 1) Remain on the line and briefly explain to the dispatcher the reason for the call.
>
> 2) Perform such activities in the off-peak hours, such as early morning or late evenings.

## 9. Toll Restriction and Least Cost Routing Equipment

The consumer/purchaser/supplier instructions accompanying this equipment and/or features of systems must contain the following notice:

> The software contained in (insert specific equipment type or features) to allow user access to the network must be upgraded to recognize newly established network area codes and exchange codes as they are placed into service.
>
> Failure to upgrade the premises systems or peripheral equipment to recognize the new codes as they are established will restrict the customer and the customer's employees from gaining access to the network and to these codes.

## 10. Equipment With Direct Inward Dialing (DID)

The consumer/purchaser/supplier instructions accompanying the equipment and/or features of systems with direct inward dialing (DID) interfaces, must contain the following:

> ALLOWING THIS EQUIPMENT TO BE OPERATED IN SUCH A MANNER AS TO NOT PROVIDE FOR PROPER ANSWER SUPERVISION IS A VIOLATION OF PART 68 OF THE FCC'S RULES

PROPER ANSWER SUPERVISION IS WHEN:

A. This equipment returns answer supervision to the PSTN when DID calls are:
   - Answered by the called station
   - Answered by the attendant
   - Routed to a recorded announcement that can be administered by the CPE user.
   - Routed to a dial prompt
B. This equipment returns answer supervision on all DID calls forwarded to the PSTN. Permissible exceptions are:
   - A call is unanswered
   - A busy tone is received
   - A reorder tone is received

**11. Equal Access Requirements**

If equipment such as PBXs, key systems or customer-owned coin/credit card telephones is sold to a call aggregator, it must be capable of providing the end-user equal access to the carrier of the user's choice. The Customer Instructions for such equipment must contain the following wording:

> This equipment is capable of providing users access to interstate providers of operator services through the use of access codes. Modification of this equipment by call aggregators to block access dialing codes is a violation of the Telephone Operator Consumers Act of 1990.

**12. Electrical Safety Advisory**

Parties responsible for equipment requiring AC power should consider including an advisory notice in their customer information suggesting the customer use a surge arrestor. Telephone companies report that electrical surges, typically lightning transients, are very destructive to customer terminal equipment connected to AC power sources and that this is a major nationwide problem.

**13. Equipment With Fax Capability**

The Customer Information for such equipment must contain the following wording:

> The Telephone Consumer Protection Act of 1991 makes it unlawful for any person to use a computer or other electronic device, including fax machines, to send any message unless such message clearly contains in a margin at the top or bottom of each transmitted page or on the first page of the transmission, the date and time it is sent and an identification of the business or other entity, or other individual sending the message and the telephone number of the sending machine or such business, other entity, or individual. (The telephone number provided may not be a 900 number or any other number for which charges exceed local or long-distance transmission charges.)
> In order to program this information into your fax machine, you should complete the following steps: (Insert here instructions for programming the equipment and the required information or the page where it can be found.)

These requirements apply to all fax machines and have been extended to all fax modems manufactured on or after December 13, 1995.

**14. KX Equipment**

In addition to the regular Customer Information required by this section, users and installers of KX equipment should be notified that such devices can only be installed with the permission of the owner of the host equipment as "surgery" is often required on the host system.

## 15. Alarm Dialing Equipment

Alarm dialing equipment (equipment code “AL”), including dialers associated with fire and intrusion protection systems, medical alert systems, equipment failure notification systems, etc. must be connected to a properly installed RJ31X or RJ38X jack to ensure the ability to seize the telephone line in emergency situations. It is a requirement that the customer information accompanying such equipment include the following statement and diagram (where RJ38X may be used in place of RJ31X, if appropriate, and the name and/or model number of the equipment may be substituted for the term “alarm dialing equipment” in the text and figure):

> Alarm dialing equipment must be able to seize the telephone line and place a call in an emergency situation. It must be able to do this even if other equipment (telephone, answering system, computer modem, etc.) already has the telephone line in use. To do so, alarm dialing equipment must be connected to a properly installed RJ31X jack that is electrically in series with and ahead of all other equipment attached to the same telephone line. Proper installation is depicted in the figure below. If you have any questions concerning these instructions, you should consult a trained technician about installing the RJ31X jack and alarm dialing equipment for you.

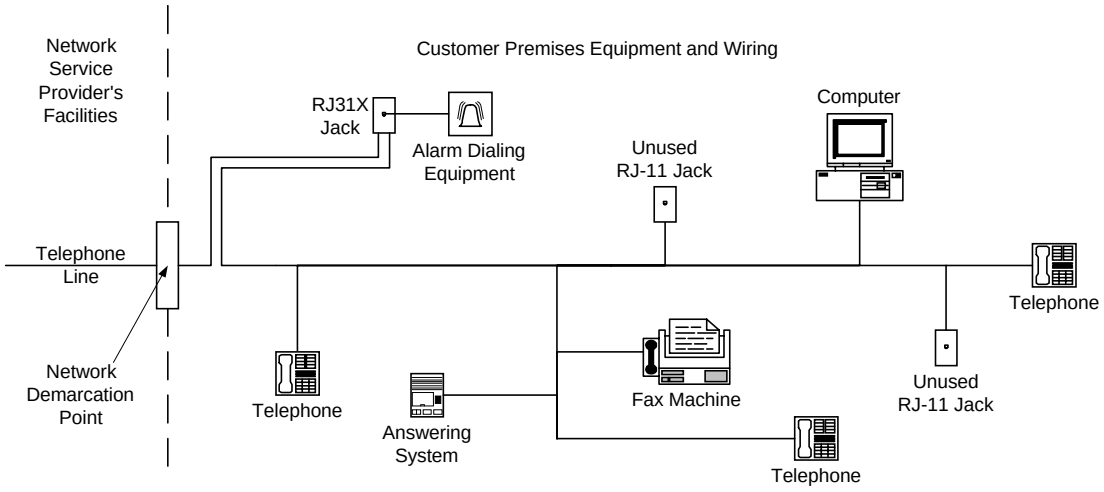


# # #